CORAME SAS
MESURE-CONTROLE-AUTOMATISME
Tél: ROUEN 02 35 59 62 50 / CAEN 02 31 35 76 45
www.corame.fr info@corame.fr

PV212

Druck hydraulic hand pump

The PV212 is a high quality hand pump designed to quickly and easily generate hydraulic pressures. The materials of construction make it compatible with most fluid media and an optional seal kit can be supplied for many applications. The built-in vernier provides excellent control and is easy to adjust even at high pressures.

The dual stage pump includes a selector valve which increases the priming speed and greatly reduces the effort required to generate high pressures. An optional pressure relief valve can be supplied to provide protection to connected instruments (Included in 104 and 104S test kits).

Features

- Pressures to 700 bar (10,000 psi) or 1,000 bar (15,000 psi)
- Compatible with distilled water or mineral oil
- Quick priming and pressure generation
- Hydraulic pressure sources for pressures up to 1,000 bar (15,000 psi)
- 100 CC transparent reservoir which can be filled during operation
- Vernier adjust for fine control
- Optional pressure release valves offers outstanding control for decreasing pressures

PV212 specifications

(See Page 4 for ordering information)

General

Pressure ranges

PV212-22: 0 to 700 bar (0 to 10,000 psi)

PV212-23: 0 to 1000 bar (0 to 15,000 psi)

Materials

Series 300 stainless steel, brass, nickel plated brass, polyester, nitrile, polyurethane and PTFE

Fluid media

Mineral oil, distilled water

Dimensions (L x W x D)

23 cm x 16 cm x 7 cm (9 in. x 6.25 in. x 2.75 in.)

Weight

Approximately 1.6 kg (3.5 lb).

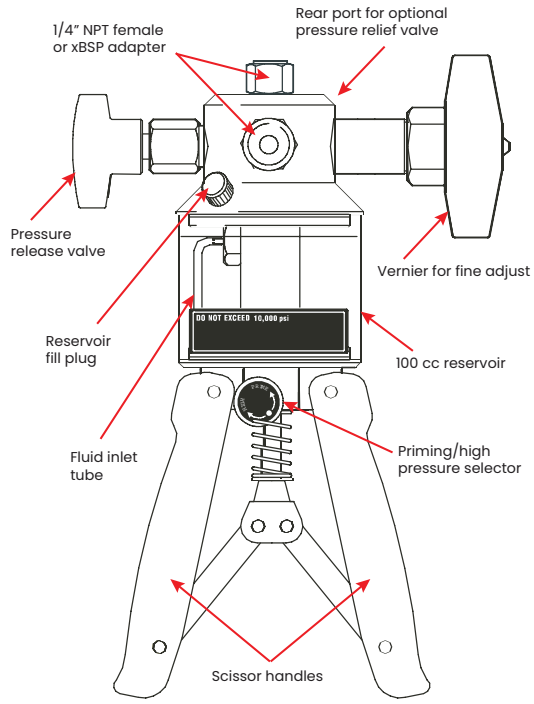

PV212-X components

PV212 accessories specifications

HK212 high pressure hose kit specifications

The HK212 are high quality pressure hose kits designed to operate with the PV212. The standard stainless steel/nylon construction is suitable for use with oil, alcohol or water.

Self-sealing fittings—finger tight connections

- Low volumetric expansion—negligible pressure drop
- Heavy duty construction

Working pressure

1000 bar (15,000 psi)

Minimum burst pressure

2500 bar (36,200 psi)

Pressure connections

B : BSP

N : NPT

Minimum bend radius

5.7 cm (2.25 in.)

Working temperature

-30°C to 80°C (-22°F to 176°F)

Construction

Nylon, stainless steel, brass, PTFE, nitrile

Outer diameter

6.4 mm (0.25 in.)

Bore

3.3 mm (0.13 in.)

Fluids

Mineral oil and distilled water

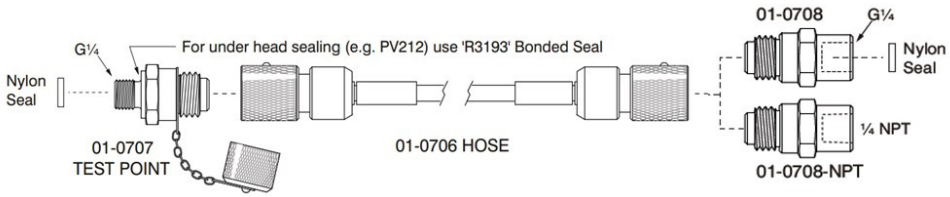

PRV212 adjustable pressure relief valve specifications

The PRV212 is a pressure relief valve designed for use with the PV212 Series of hydraulic hand pumps to provide overpressure protection to instruments under test. The PRV212 mounts directly on to the PV212 and is supplied in factory preset configurations which can be user adjusted.

Material

303 stainless steel

Inlet connection

G 1/4" male

Seals

Polyurethane, PTFE, nitrile, nylon.

Maximum working pressure

1000 bar (15,000 psi)

Dimensions

4 cm x 2.2 cm diameter (1.6 in. x .87 in.)

Weight

62 g (2.1 oz)

Accuracy/repeatability

±10% nominal setting

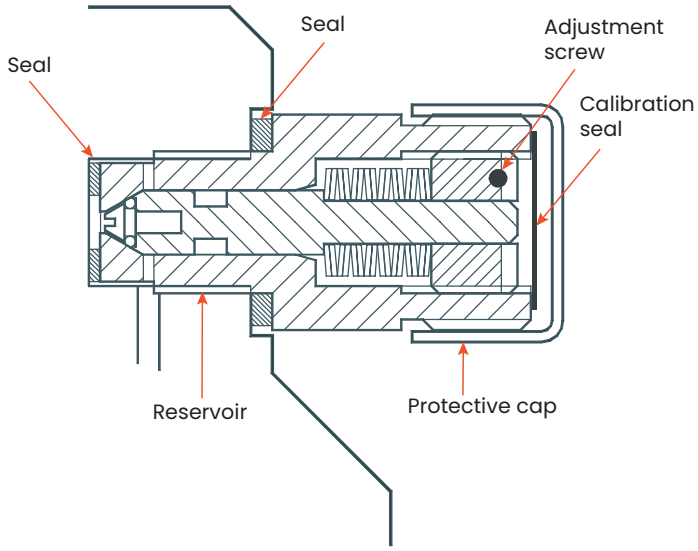

PV212 adapter sets

PV212-ADAPTORS1 - (PV212 set of BSP to BSP adapters)

- 1/4" BSP male x 1/8" BSP male
- 1/4" BSP male x 1/8" BSP female
- 1/4" BSP male x 3/8" BSP female
- 1/4" BSP male x 1/2" BSP female
- 1/4" BSP male x 1/4" BSP male

PV212-ADAPTORS2 - (PV212 set of BSP to NPT adapters)

- 1/4" BSP male x 1/2" NPT female
- 1/4" BSP male x 3/8" NPT female
- 1/4" BSP male x 1/8" NPT female
- 1/4" BSP male x 1/4" NPT female
- 1/4" BSP male x 1/4" BSP male
- 1/4" BSP male x 1/4" NPT male

PV212-ADAPTORS3 - (PV212 set of NPT to NPT adapters)

- 1/42 NPT male x 1/4" NPT male
- 1/4" NPT male x 1/8" NPT male
- 1/4" NPT male x 1/8" NPT female
- 1/4" NPT male x 3/8" NPT female
- 1/4" NPT male x 1/2" NPT female
- 1/4" NPT male X 1/4" BSP female

CORAME SAS
MESURE-CONTROLE-AUTOMATISME
Tél: ROUEN 02 35 59 62 50 / CAEN 02 31 35 76 45
www.corame.fr info@corame.fr

Ordering information

Use this table to order "PV212-X"

PV212	PV212 hydraulic hand pump				
	-22	700 bar/10000 psi			
	-23	1000 bar/15000 psi			
		-P	Pump only		(Pump supplied in cardboard box, with basic BSP and NPT adapters)
		-TK	Pump test kit		(Pump supplied in transit case with relevant adapter kit and hoses)
		-104	Pump test kit		(Pump supplied in transit case with relevant adapter kit, hoses, PRV, and DPI104)
		-104S	Pump test kit		(Pump supplied in transit case with relevant adapter kit, hoses, PRV, and DPI104S)
			-B	BSP (Only mandatory to select one if " TK, 104 or 104S" is selected)	
			-N	NPT (Only mandatory to select one if " TK, 104 or 104S" is selected)	
				-16A	See tables below if "104 or 104S" is selected
				-16G	See tables below if "104 or 104S" is selected
				-18S	See tables below if "104 or 104S" is selected
				-20S	See tables below if "104 or 104S" is selected
				-22S	See tables below if "104 or 104S" is selected
				-23S	See tables below if "104 or 104S" is selected
PV212	**-22**	**-104S**	**-B**	**-16A**	**(Typical model number)**

Other examples may be:
PV212-22-P (pump only)
PV212-22-TK-B (pump kit with BSP fittings)
PV212-23-104S-B-16A (pump kit with BSP fittings and DPI104-IS)

DPI104/DPI104S pressure ranges for fitting B - BSP

Code	Description
16A	70 bar absolute
16G	70 bar gauge
18S	200 bar sealed gauge
20S	350 bar sealed gauge
22S	700 bar sealed gauge

DPI104/DPI104S pressure ranges for fitting N - NPT

Code	Description
16A	1000 psi absolute
16G	1000 psi gauge
18S	3000 psi sealed gauge
20S	5000 psi sealed gauge
22S	10000 psi sealed gauge
23S	15000 psi sealed gauge

DPI104/DPI104S pressure ranges for fitting B - BSP

Code	Description
23S	1000 bar sealed gauge

Spares
(please order all items separately using the below part numbers)

Part number	Description
PV212A121M2038-1	PV212-22 fine control assembly 700 bar
PV212A121M2038-2	PV212-23 fine control assembly 1000 bar
PV212A121M2038-3	PV212-22 handle/piston assembly 700 bar
PV212A121M2038-4	PV212-23 handle/piston assembly 1000 bar
PV212A121M2038-5	PV212 common release valve assembly
PV212A121M2038-6	PV212 pump labels
PV212-SK-FULL	PV212 common seal kit

Accessories
(please order all items separately using the below part numbers)

Part number	Description
PV212-ADAPTORS1	PV212 Set of BSP to BSP Adaptors
PV212-ADAPTORS2	PV212 Set of BSP to NPT Adaptors
PV212-ADAPTORS3	PV212 Set of NPT to NPT Adaptors
PV212-TC	PV212 transit case
PV212-SK	PV212 common service kit
HK212-B-1	High pressure hose kit (1 m BSP)
HK212-B-2	High pressure hose kit (2 m BSP)
HK212-N-1	High pressure hose kit (1 m NPT)
HK212-N-2	High pressure hose kit (2 m NPT)
PRV212-1	Pressure relief valve 50 bar
PRV212-2	Pressure relief valve 200 bar
PRV212-3	Pressure relief valve 400 bar
PRV212-4	Pressure relief valve 700 bar
PRV212-5	Pressure relief valve 1000 bar
1S-PRVSK1	PRV212 relief valve common seal kit

Delivering world class pressure measurement and calibration technology

2026 Copyright by Druck Limited. All rights reserved.

920-226E
BHCS38680B (02/2026)

Druck

druck.com